PUBLIC NOTICE

APPLICATION FOR PERMIT

US Army Corps of Engineers®

Public Notice/Application No. SPL-2007-00679-MB
Comment Period: November 5 – December 5, 2007

Applicant
Lake Havasu City
Public Works Administration
Mr. Mark Clark
2330 McCulloch Boulevard North
Lake Havasu City, Arizona 86403
(928) 453-6660

Agent
AMEC Earth & Environmental
Ms. Marcie Martin
1405 W. Auto Drive
Tempe, Arizona 85284

Location

At the proposed 12-acre Air Industrial Park development, just south of the airport on Air Park Road, .5 miles east of Hwy 95 (Section 15, T4N, R20W), six miles north of Lake Havasu City, Mohave County, Arizona (Figure 1).

Activity

The City of Lake Havasu City proposes to develop an industrial air park with 322,258 square feet of office and warehouse space. The proposed activity will result in the discharge of dredged and/or fill material into 5.92 acres of waters of the U.S. (WUS) from pad fills, drainage conveyance, collector basins, and road crossings. Detailed project information is provided on page 3 of this public notice.

Interested parties are hereby notified that an application has been received for a Department of the Army permit for the activity described herein and shown on the attached drawing(s). Interested parties are invited to provide their views on the proposed work, which will become a part of the record and will be considered in the decision. This permit application will be issued or denied under Section 404 of the Clean Water Act (33 U.S.C. 1344).

Comments can be e-mailed to Marjorie.E.Blaine@usace.army.mil or mailed to:

U.S. Army Corps of Engineers
ATTENTION: Regulatory Branch (SPL-2007-00679-MB)
5205 E. Comanche Street
Tucson, Arizona 85707

Evaluation Factors

The decision whether to issue a permit will be based on an evaluation of the probable impact, including cumulative impacts of the proposed activity on the public interest. That decision will reflect the national concern for both protection and utilization of important resources. The benefit, which reasonably may be expected to accrue from the proposal, must be balanced against its reasonably foreseeable detriments. All factors that may be relevant to the proposal will be considered, including the cumulative effects thereof. Factors that will be considered include conservation, economics, aesthetics, general environmental concerns, wetlands, cultural values, fish and wildlife values, flood hazards, floodplain values, land use, navigation, shoreline erosion and accretion, recreation, water supply and conservation, water quality, energy needs, safety, food production and, in general, the needs and welfare of the people. In addition, the evaluation of the activity will include application of the Environmental Protection Agency (EPA) Guidelines (40 CFR 230) as required by Section 404 (b)(1) of the Clean Water Act.

The Corps of Engineers is soliciting comments from the public; Federal, state, and local agencies and officials; Indian tribes; and other interested parties in order to consider and evaluate the impacts of this proposed activity. Any comments received will be considered by the Corps of Engineers to determine whether to issue, modify, condition, or deny a permit for this proposal. To make this decision, comments are used to assess impacts on endangered species, historic properties, water quality, general environmental effects, and the other public interest factors listed above. Comments are used in the preparation of an Environmental Assessment and/or an Environmental Impact Statement (EIS) pursuant to the National Environmental Policy Act. Comments are also used to determine the need for a public hearing and to determine the overall public interest of the proposed activity.

Preliminary Review of Selected Factors

EIS Determination – A preliminary determination has been made that an environmental impact statement is not required for the proposed work.

Water Quality – The Applicant is required to obtain water quality certification, under Section 401 of the Clean Water Act, from the Arizona Department of Environmental Quality. Section 401 of the Clean Water Act requires that any applicant for an individual Section 404 permit provide proof of water quality certification to the Corps of Engineers**.**

Cultural Resources – A Class III cultural resource survey was conducted of this property and no properties eligible for listing in the National Register of Historic Places were identified. The Arizona State Historic Preservation Office has concurred on the Corps' determination of "no historic properties affected" for this proposed project. The Corps conducted consultations with the appropriate Native American Tribes.

Endangered Species –There are no threatened or endangered species currently listed or proposed for listing which occur within the project area and there is no designated critical habitat within the proposed project area. The Corps has determined the proposed project will have "no effect" on any proposed or currently listed threatened or endangered species.

Public Hearing – Any person may request, in writing, within the comment period specified in this notice, that a public hearing be held to consider this application. Requests for public hearing shall state with particularity the reasons for holding a public hearing.

Proposed Activity for Which a Permit is Required

The proposed Air Industrial Park consists of a mixture of office and warehouse space. Figure 2 illustrates the washes currently existing on site. A maximum of 3 pads segregated by wash alignments are proposed within the 12.33-acre project site. The site will also consist of a series of collection and discharge basins to handle flows entering and exiting the site. The discharge of dredged/fill material will occur into 5.92 ac of WUS resulting in permanent, direct impacts to WUS for access road crossings, pad fills, and grading for drainage conveyance (Figure 3). Approximately 4,311 cubic yards (cy) of native on-site material for pads; 1,203 cy of asphalt for roads; 586 cy of riprap and 3,035 cy of clean fill for basins; 1,307 cy of concrete for Channel 4; 2,666 cy of gabion lining and 441 cy of pyramat lining for other channels and washes; and 53 cy of piping for stormwater and utilities will be discharged onsite within waters of the U.S. Detailed descriptions of impacts to each wash are provided below (Figures 2 and 3).

Wash A: This wash will be mass graded within the property boundary. Flows from the undisturbed upstream reach of Wash A will flow into Collection Basin 1 via a constructed rip-rap apron and would then go through two 48-inch diameter corrugated metal pipes (CMP) beneath Air Park Road into Channel 1 which will discharge into the unimpacted Wash A just downstream of the west property line. Collection Basin 1 will have an average bottom width of 39.8 feet, average slope of 10%, and be constructed of native on-site materials (Figure 4). Channel 1 will have a rip-rap lined bottom width of 12' and an average slope of 3.3%. Approximately .03 acres of Wash A will be permanently impacted with the discharge of fill material.

Wash B (Minor Wash 1): The northern portion of this wash will be mass graded within the property boundary. Flows from the undisturbed upstream northern tributary of this wash will enter Collection Basin 2 through a rip-rap lined apron, will pass through five 42-inch diameter CMPs under Air Park Road into a small, constructed channel and will exit the property on the western boundary. Collection Basin 2 will have an average bottom width of 34.9 feet, an average slope of 11%, and will be constructed from native onsite materials. Flows from the southern portion of Wash B offsite will enter the collection basin, flow through one 42-inch diameter CMP under Air Park Road into unimpacted Wash B and exit at the western property boundary. The bed of the southern portion of Wash B will be excavated and Pyramat and gabion baskets will be installed on the banks (Figure 5). Approximately .27 acres of Wash B will be permanently impacted with the discharge of fill material.

Wash C (Major Wash 1): Flows from the undisturbed Wash C upstream of the property will be directed into Collection Basin 3 (Figure 6) via a rip-rap apron then directed under Air Park Road through five 54-inch diameter CMPs to the downstream portion of Wash C through the property. The bed of Wash C will be excavated and the banks lined with Pyramat and gabions; the bottom width will be approximately 10 feet wide with a 4" slope (Figure 7). Low flow events from Wash C on the property would be directed into the undisturbed portion of Wash C downstream through one 15-inch diameter CMP; higher events would be directed via a weir into Discharge Basin 1 (Figure 8) and then into the downstream, undisturbed Wash C. The discharge of fill material will result in permanent impacts to .5 acre of Wash C.

Wash D (Major Wash 2): Flows from the undisturbed Wash D upstream of the property will enter Collection Basin 4 (Figure 9) through a rip-rap lined apron and will then be directed under Air Park Road through five 48-inch diameter CMPs into the downstream portion of Wash D through the property. The bed of Wash D will be excavated and the banks lined with Pyramat and gabions; the bottom width will be approximately 25 feet (Figure 10). This wash will then discharge into Discharge Basin 2 (Figure 11), constructed of onsite materials, and directed into the unimpacted Wash D downstream of the property. The discharge of fill material into Wash D will result in .40 acre of permanent impacts.

Wash System E: This wash has several interconnected tributaries upstream of the property. The flows from the northern tributaries will be directed into Collection Basin 5 (Figure 12) via a rip-rap lined apron and then under Air Park Road through five 48-inch diameter CMPs and into one northern tributary of Wash E (Major Wash 3). The bed of this channel will be excavated to a bottom width of 24 feet and the banks lined with Pyramat and gabions (Figure 13). This wash will discharge into Discharge Basin 2 (Figure 11) which will then discharge through a 15-inch diameter CMP into the unimpacted downstream portion of this wash at the west property line. The remaining tributaries of Wash E upstream of the property will be directed into Collection Basin 6 (Figure 14) via two rip-rap lined aprons (one central apron and one at the southeast property corner). These flows will then be directed into a concrete-lined constructed Channel 4 which will have an average bottom width of 24 feet and an average slope of 1% (Figure 15). This channel will discharge flows into Discharge Basin 3 which will direct flows into the downstream, undisturbed portions of Wash E through one 15-inch diameter CMP (Figure 16). All but the most northern tributary of Wash E will be mass graded for Pad 3. Permanent impacts from the discharge of fill material to the entire Wash E System E is 4.72 acres.

Additional Project Information

The basic project purpose is industrial development which is not a water-dependent activity. The overall project purpose is to develop an air industrial park with mixed office and warehouse space within the city limits of Lake Havasu City. The project is located within the Sonoran Desertscrub, Lower Colorado River biotic community with elevations ranging between 760' to 840' above mean seal level. In general, the soil is Thermic Arid and the wash bottoms vary from sandy fine-grained to sand with large-grained pebbles and rocks. The general flow of surface water in this area is southwest to the Colorado River. Shrub vegetation is sparse and dominated by creosote (*Larrea tridentate*), brittle bush (*Encelia farinose*), bursage (*Ambrosia* sp.), various grasses, and some palo verde trees (*Cercidium* sp.).

There are approximately 7.35 ac of WUS which are jurisdictional under Section 404 within the project area. The proposed project will directly and indirectly involve the permanent loss of 80% of the WUS from the discharge of dredged and/or fill material onsite. The channels/washes were designed to meet FEMA requirements, minimize impacts to WUS, and provide required area for building pads. The applicant will submit in-lieu-fee mitigation at a ratio of 1:1 to offset the permanent impacts of the proposed project. The WUS within the proposed project area are tributary to Lake Havasu which is an impoundment of the Colorado River which is a navigable water of the U.S. as defined in 33 CFR329.

Proposed Special Conditions

None at this time.

For additional information please call Marjorie Blaine at (520)584-1684. This public notice is issued by the Chief, Regulatory Division.

Vicinity Map

Lake Havasu City
Air Industrial Park

South of Lake Havasu Airport
Along Air Park Road

Legend

- Interstate Route
- US Route
- State Route
- Major Street
- Local Route
- Future Route
- City
- Property Boundary

Location of Site

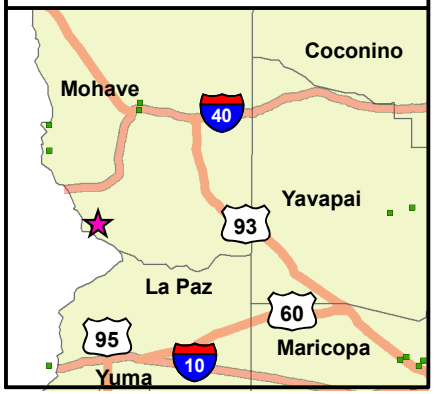

Notes & Sources

Source : AMEC
Streets ADOT 2006

0 0.5 1
Miles

N

amec

AMEC Earth & Environmental, Inc.
1405 West Auto Drive
Tempe, AZ 85284
(480) 940-2320

FIGURE
1

Map Document: (X:\Projects\6-114-003056\MXD\Figure1vicinity_map.mxd) 3/9/2007 -- 9:14:21 AM

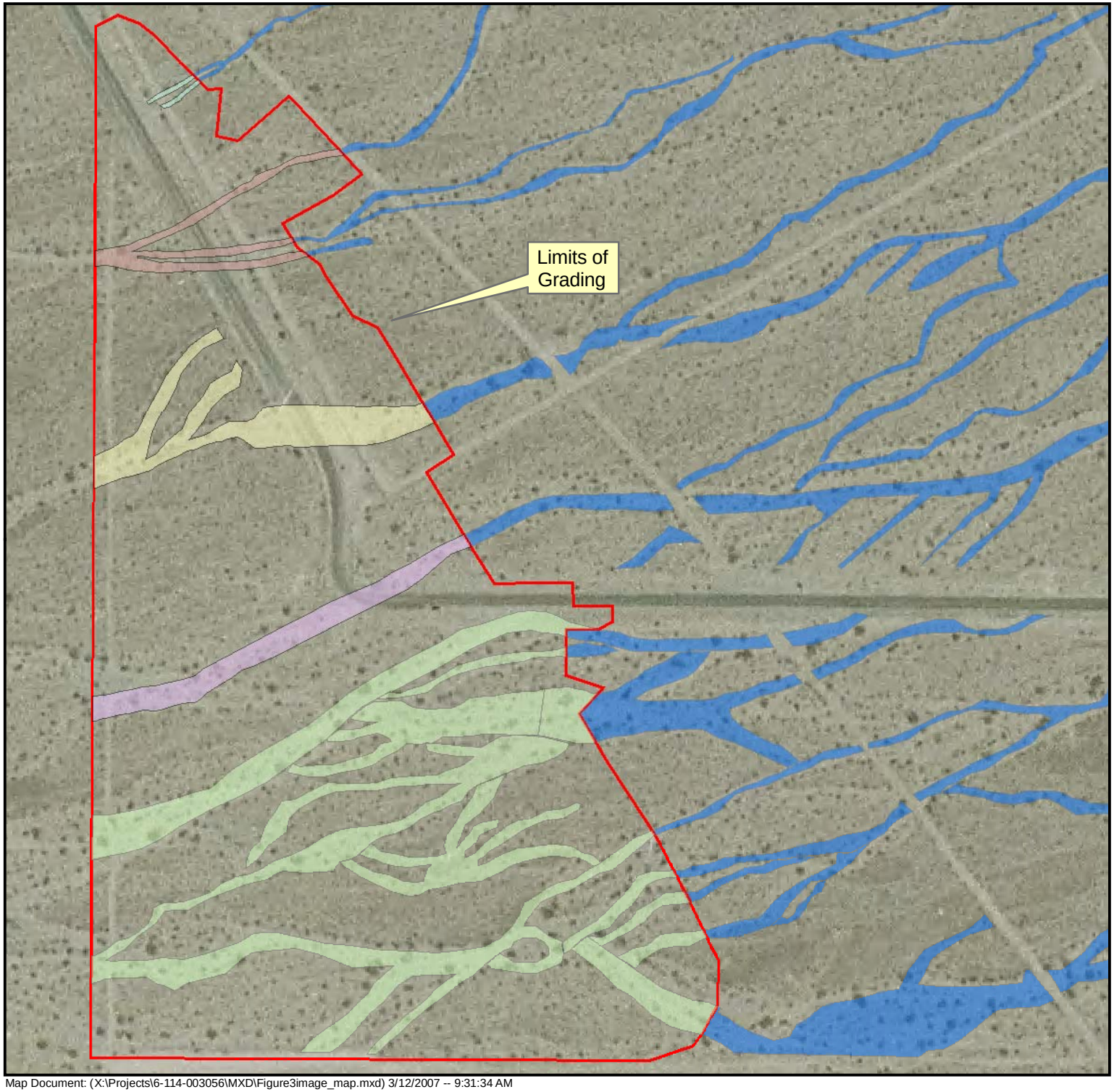

Area Washes

Lake Havasu City
Air Industrial Park

South of Lake Havasu Airport
Along Air Park Road

Legend

- Limits of Grading
- Washes

Wash System

- A
- B
- C
- D
- E

Location of Site

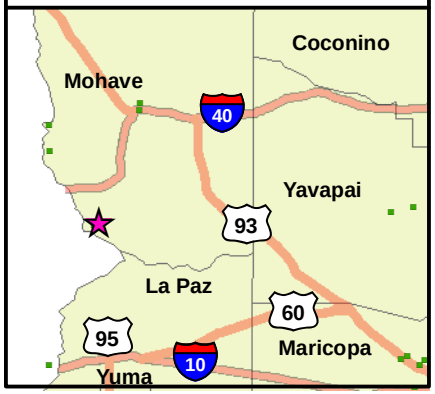

Notes & Sources

Source : AMEC
Image: Arizona Imagery Server

0 150 300 Feet

N

amec

AMEC Earth & Environmental, Inc.
1405 West Auto Drive
Tempe, AZ 85284
(480) 940-2320

FIGURE
2

Map Document: (X:\Projects\6-114-003056\MXD\Figure3image_map.mxd) 3/12/2007 -- 9:31:34 AM

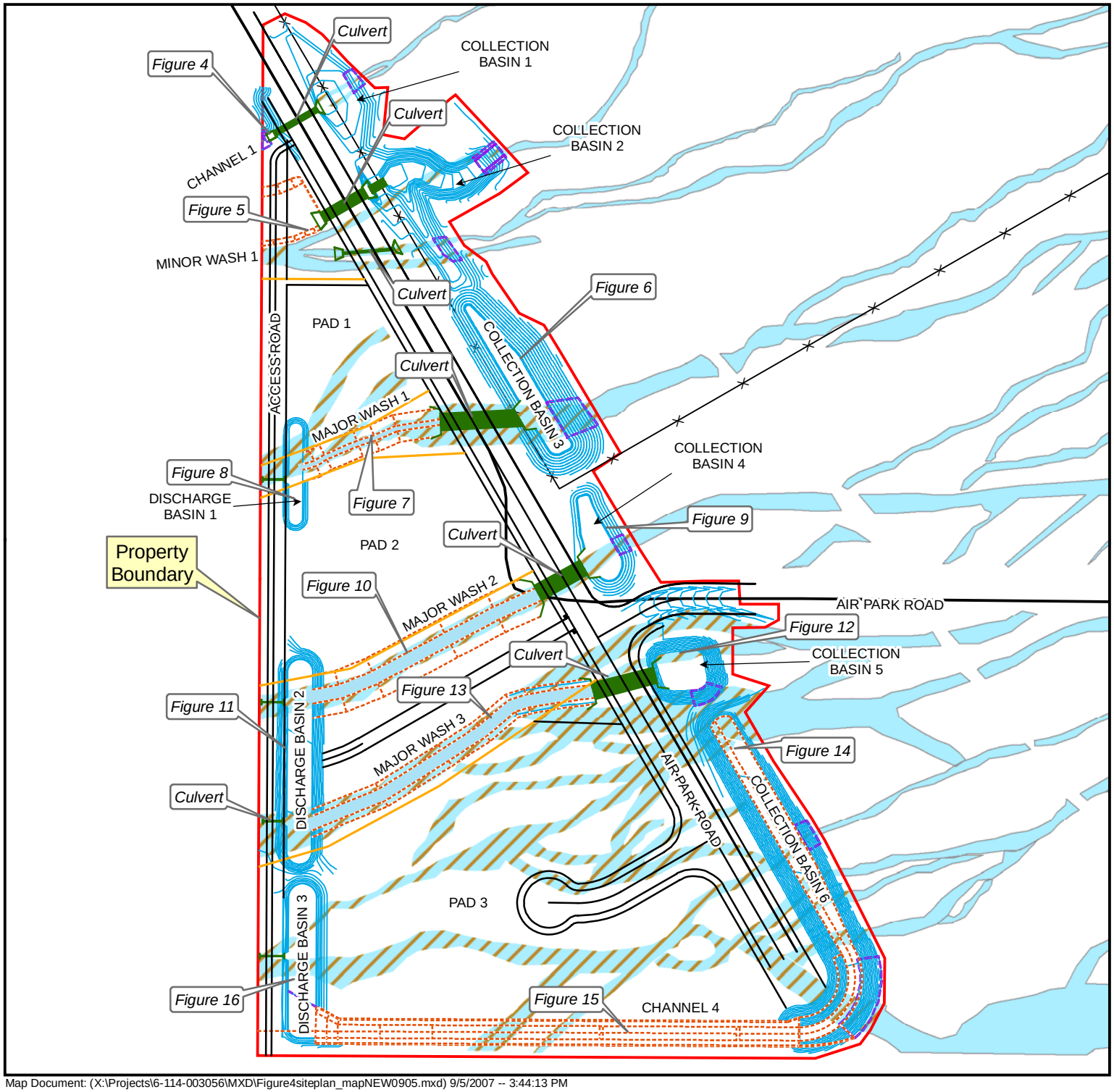

Map Document: (X:\Projects\6-114-003056\MXD\Figure4siteplan_mapNEW0905.mxd) 9/5/2007 -- 3:44:13 PM

Site Plan

Lake Havasu City
Air Industrial Park

South of Lake Havasu Airport
Along Air Park Road

Legend

- Site Plan
- Pads
- Channels
- Riprap
- Basins
- Culverts
- Property Boundary
- Impact Area
- Washes
- Air Park Road
- Airport Boundary
- XS Cross Section locations

Location of Site

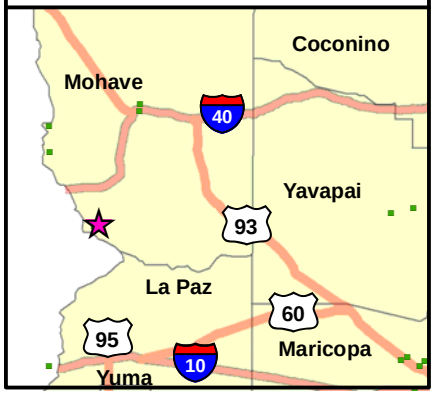

Notes & Sources

Source : AMEC
Streets ADOT 2006

0 150 300 Feet

N

amec

AMEC Earth & Environmental, Inc.
1405 West Auto Drive
Tempe, AZ 85284
(480) 940-2320

FIGURE
3

G:\Environmental-Development\2006 Projects\6-114-003056 Lake Havasu City Air Industrial Park\cad\crosssection.dwg

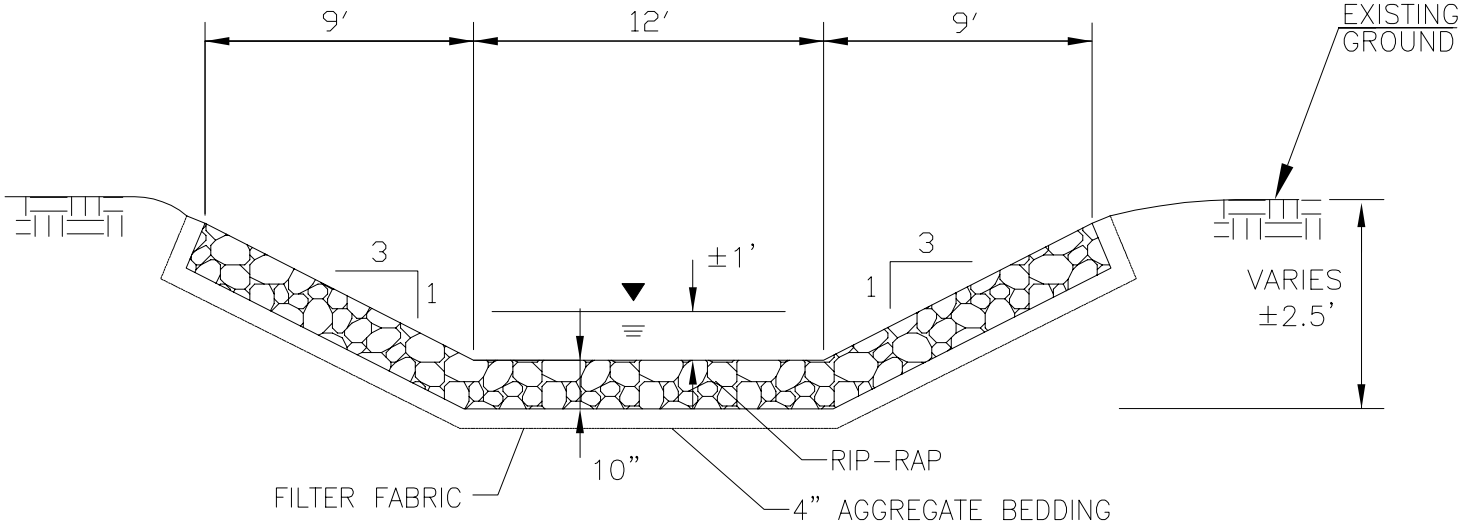

JOB NO. 6-114-003056	CHANNEL 1 TYPICAL CROSS-SECTION	amec
DESIGN:		
DRAWN:		
DATE: 9/2007	LAKE HAVASU CITY AIR INDUSTRIAL PARK	FIGURE 4
SCALE: N.T.S.		

G:\Environmental-Development\2006 Projects\6-114-003056 Lake Havasu City Air Industrial Park\cad\crosssection.dwg

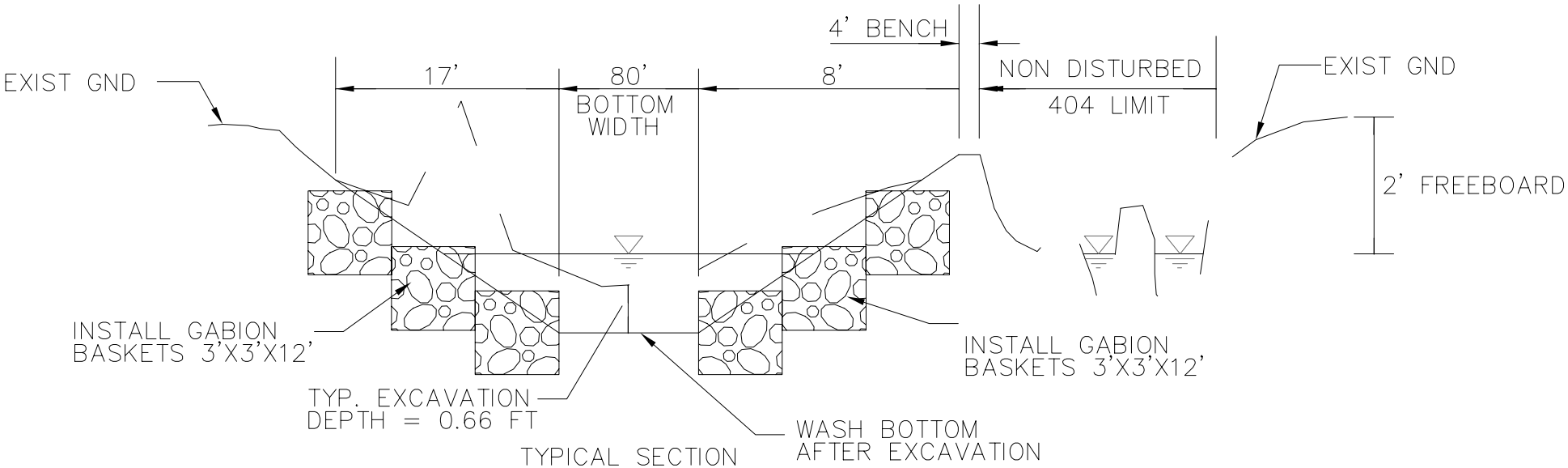

TYPICAL SECTION
MINOR WASH 1
LOOKING DOWNSTREAM
NTS

JOB NO. 6-114-003056	MINOR WASH 1 TYPICAL CROSS-SECTION	amec
DESIGN:		
DRAWN:		
DATE: 9/2007	LAKE HAVASU CITY AIR INDUSTRIAL PARK	FIGURE 5
SCALE: N.T.S.		

G:\Environmental-Development\2006 Projects\6-114-003056 Lake Havasu City Air Industrial Park\cad\crosssection.dwg

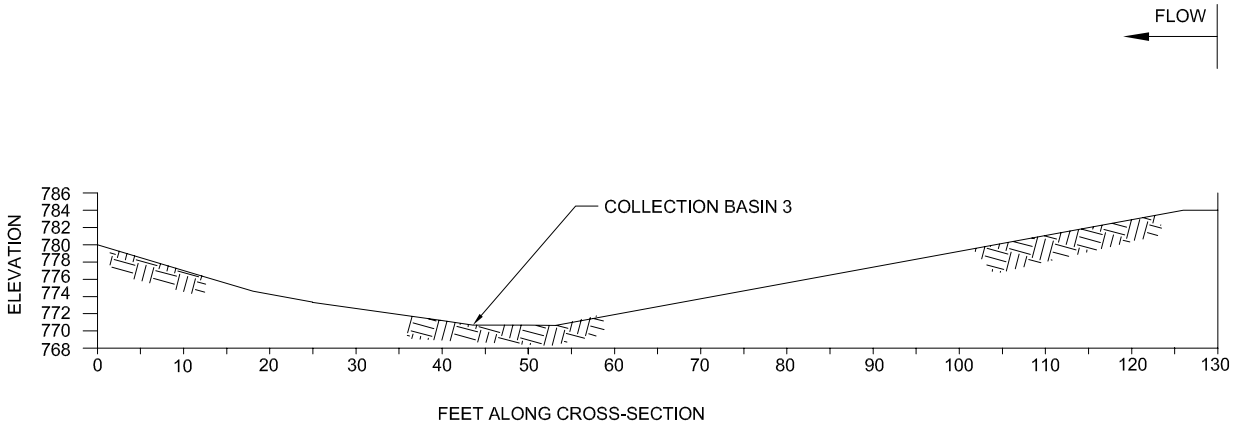

JOB NO. 6-114-003056	COLLECTION BASIN 3 TYPICAL CROSS-SECTION	
DESIGN:		
DRAWN:		
DATE: 9/2007	LAKE HAVASU CITY AIR INDUSTRIAL PARK	FIGURE 6
SCALE: N.T.S.		

amec

G:\Environmental-Development\2006 Projects\6-114-003056 Lake Havasu City Air Industrial Park\cad\crosssection.dwg

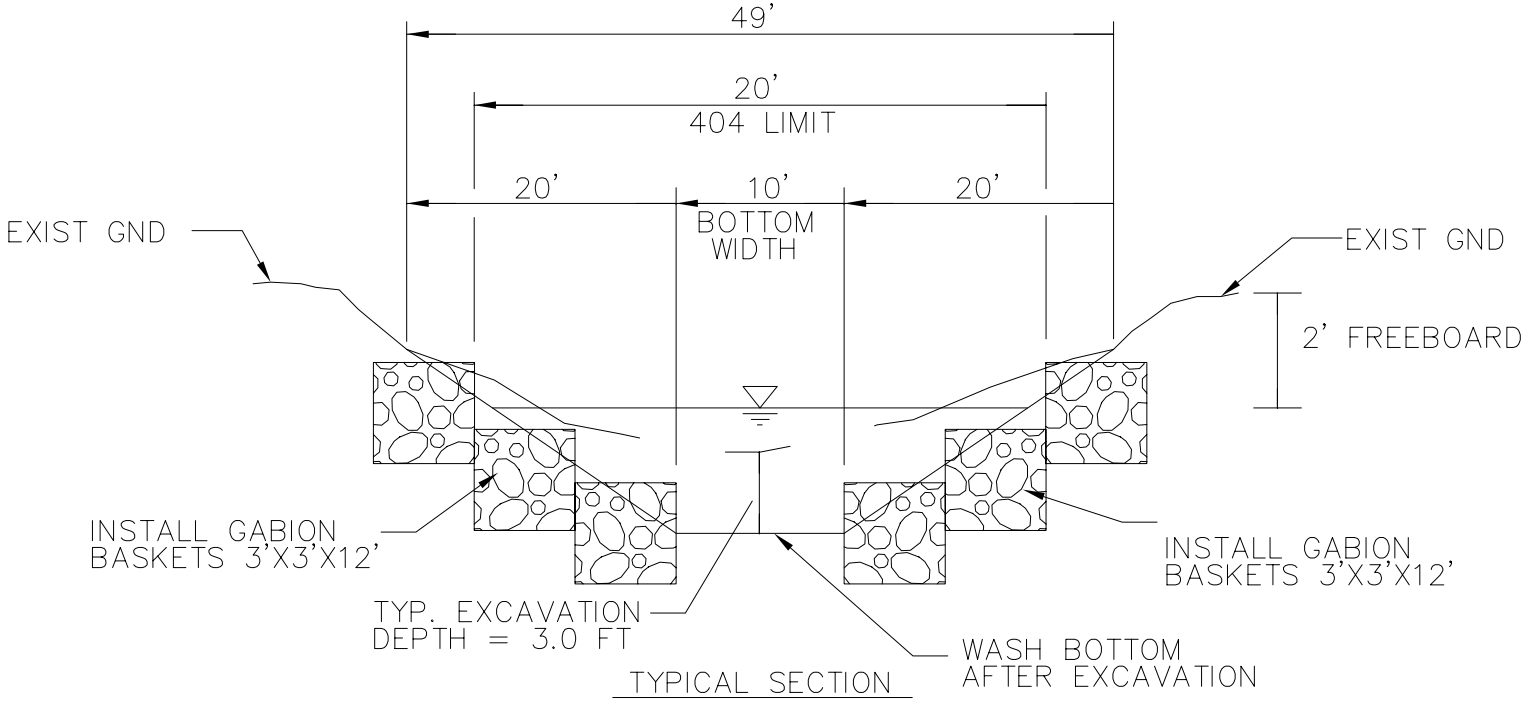

TYPICAL SECTION
MAJOR WASH 1
LOOKING DOWNSTREAM
NTS

JOB NO. 6-114-003056	MAJOR WASH 1 TYPICAL CROSS-SECTION	
DESIGN:		
DRAWN:		
DATE: 9/2007	LAKE HAVASU CITY AIR INDUSTRIAL PARK	FIGURE 7
SCALE: N.T.S.		

amec

G:\Environmental-Development\2006 Projects\6-114-003056 Lake Havasu City Air Industrial Park\cad\crosssection.dwg

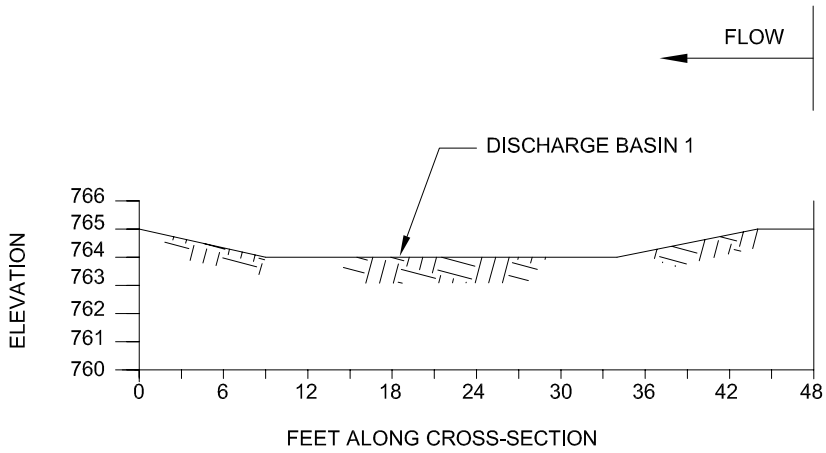

JOB NO. 6-114-003056	DISCHARGE BASIN 1 TYPICAL CROSS-SECTION	
DESIGN:		
DRAWN:		
DATE: 9/2007	LAKE HAVASU CITY AIR INDUSTRIAL PARK	FIGURE 8
SCALE: N.T.S.		

amec

G:\Environmental-Development\2006 Projects\6-114-003056 Lake Havasu City Air Industrial Park\cad\crosssection.dwg

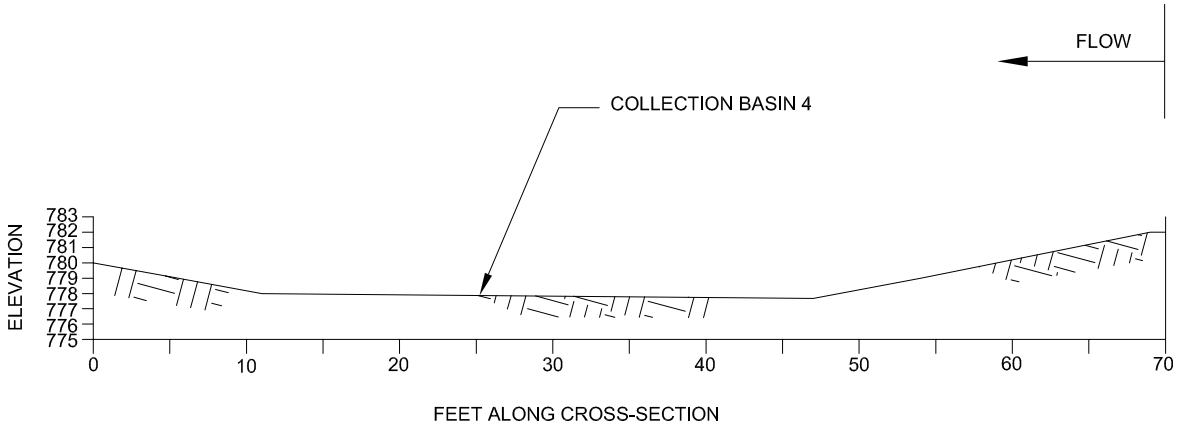

JOB NO. 6-114-003056	COLLECTION BASIN 4 TYPICAL CROSS-SECTION	
DESIGN:		
DRAWN:		
DATE: 9/2007	LAKE HAVASU CITY AIR INDUSTRIAL PARK	FIGURE 9
SCALE: N.T.S.		

amec

G:\Environmental-Development\2006 Projects\6-114-003056 Lake Havasu City Air Industrial Park\cad\crosssection.dwg

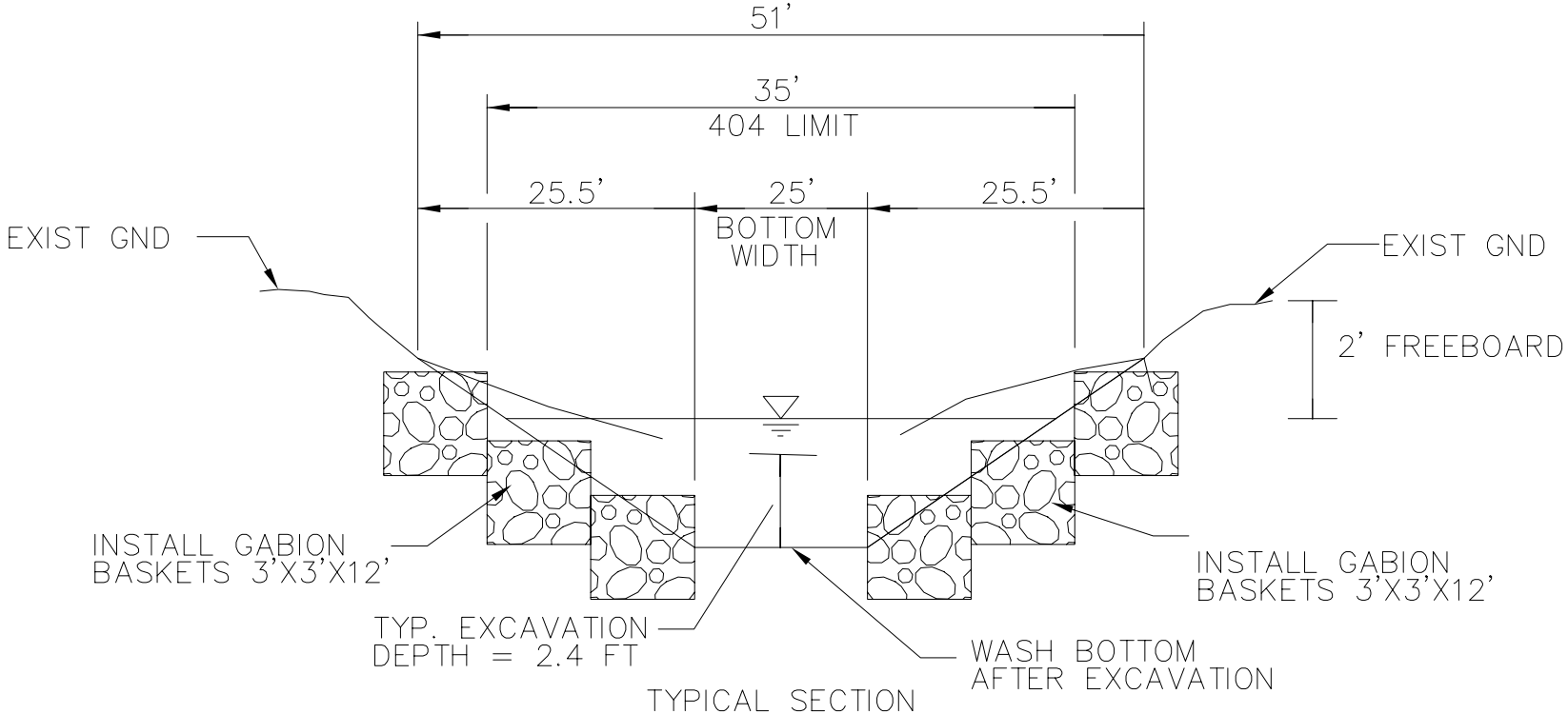

TYPICAL SECTION
MAJOR WASH 2
LOOKING DOWNSTREAM
NTS

JOB NO. 6-114-003056	MAJOR WASH 2 TYPICAL CROSS-SECTION	
DESIGN:		
DRAWN:		
DATE: 9/2007	LAKE HAVASU CITY AIR INDUSTRIAL PARK	FIGURE 10
SCALE: N.T.S.		

amec

G:\Environmental-Development\2006 Projects\6-114-003056 Lake Havasu City Air Industrial Park\cad\crosssection.dwg

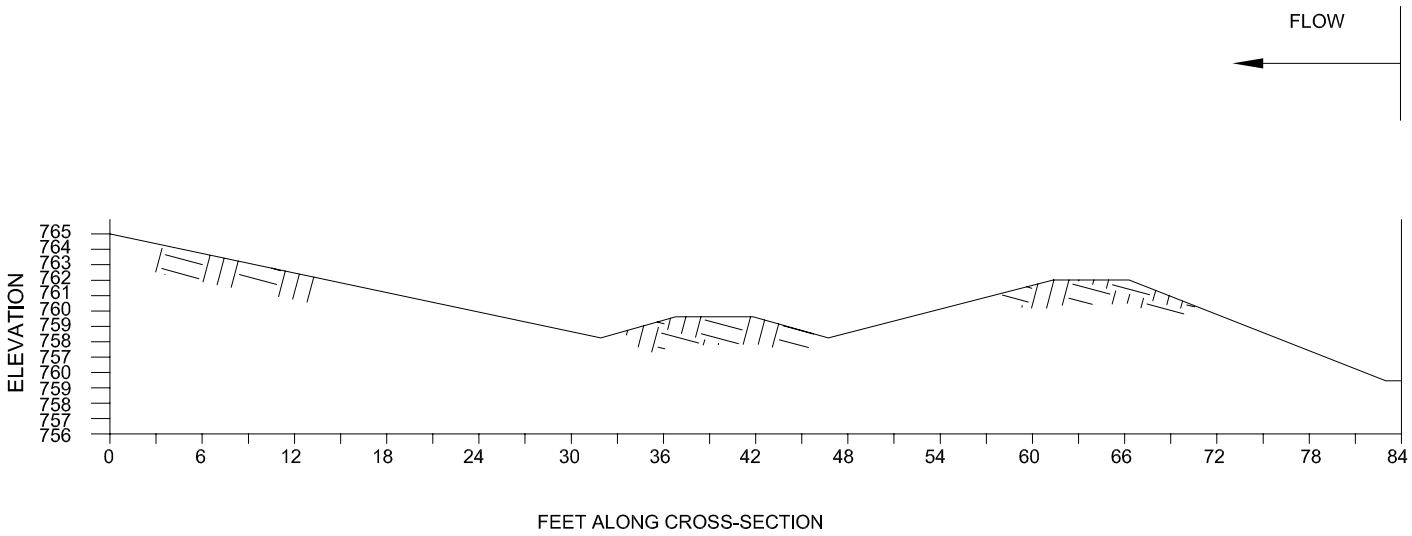

JOB NO. 6-114-003056	DISCHARGE BASIN 2 TYPICAL CROSS-SECTION	
DESIGN:		
DRAWN:		
DATE: 9/2007	LAKE HAVASU CITY AIR INDUSTRIAL PARK	FIGURE 11
SCALE: N.T.S.		

amec

G:\Environmental-Development\2006 Projects\6-114-003056 Lake Havasu City Air Industrial Park\cad\crosssection.dwg

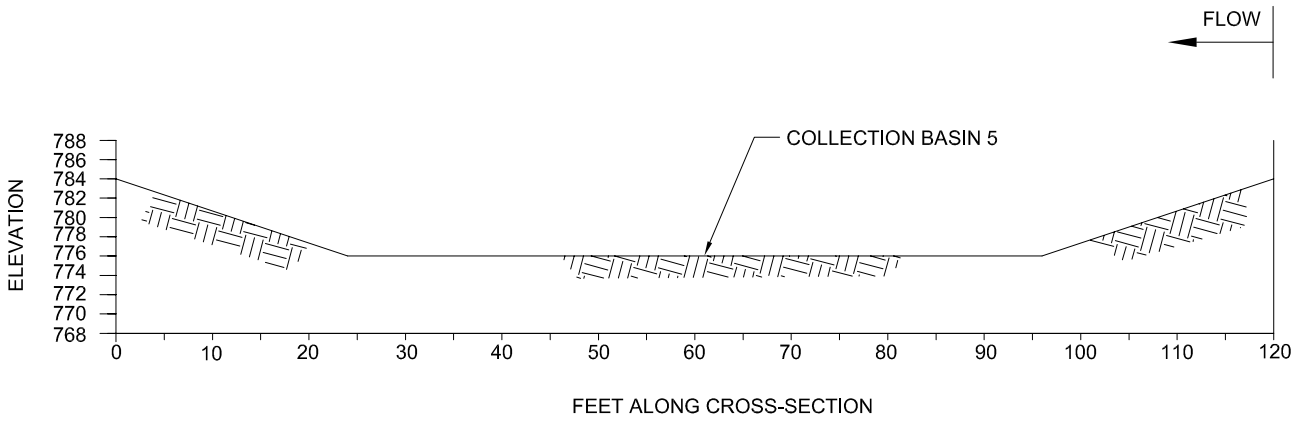

JOB NO. 6-114-003056	COLLECTION BASIN 5 TYPICAL CROSS-SECTION	
DESIGN:		
DRAWN:		
DATE: 9/2007	LAKE HAVASU CITY AIR INDUSTRIAL PARK	FIGURE 12
SCALE: N.T.S.		

amec

G:\Environmental-Development\2006 Projects\6-114-003056 Lake Havasu City Air Industrial Park\cad\crosssection.dwg

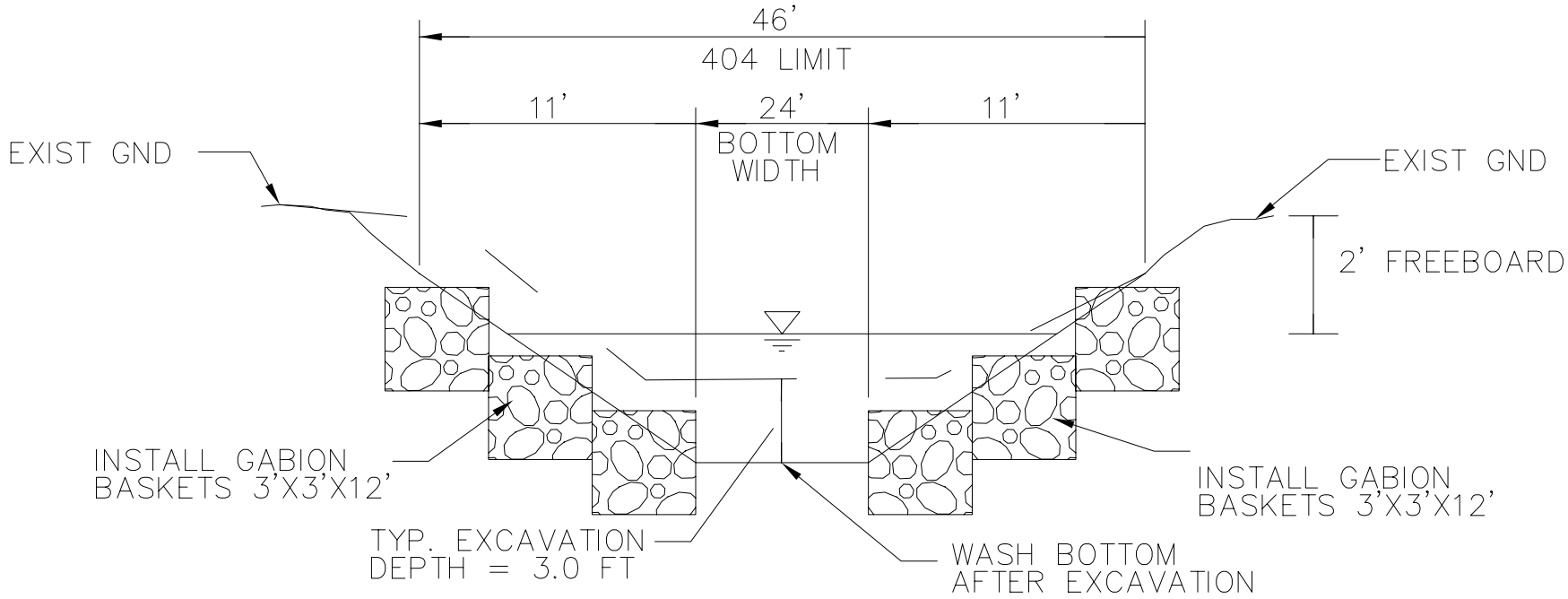

TYPICAL SECTION
MAJOR WASH 3
LOOKING DOWNSTREAM
NTS

JOB NO. 6-114-003056	MAJOR WASH 3 TYPICAL CROSS-SECTION	amec
DESIGN:		
DRAWN:		
DATE: 9/2007	LAKE HAVASU CITY AIR INDUSTRIAL PARK	FIGURE 13
SCALE: N.T.S.		

G:\Environmental-Development\2006 Projects\6-114-003056 Lake Havasu City Air Industrial Park\cad\crosssection.dwg

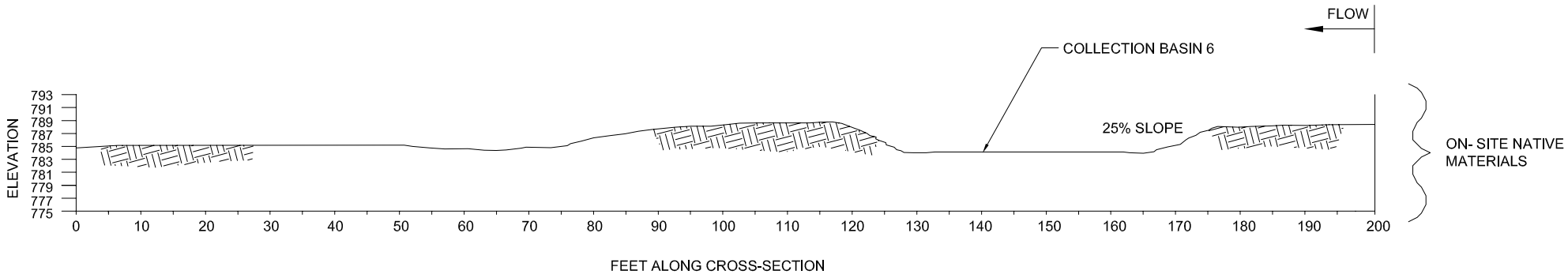

JOB NO. 6-114-003056	COLLECTION BASIN 6 TYPICAL CROSS-SECTION	
DESIGN:		
DRAWN:		
DATE: 9/2007	LAKE HAVASU CITY AIR INDUSTRIAL PARK	FIGURE 14
SCALE: N.T.S.		

amec

G:\Environmental-Development\2006 Projects\6-114-003056 Lake Havasu City Air Industrial Park\cad\crosssection.dwg

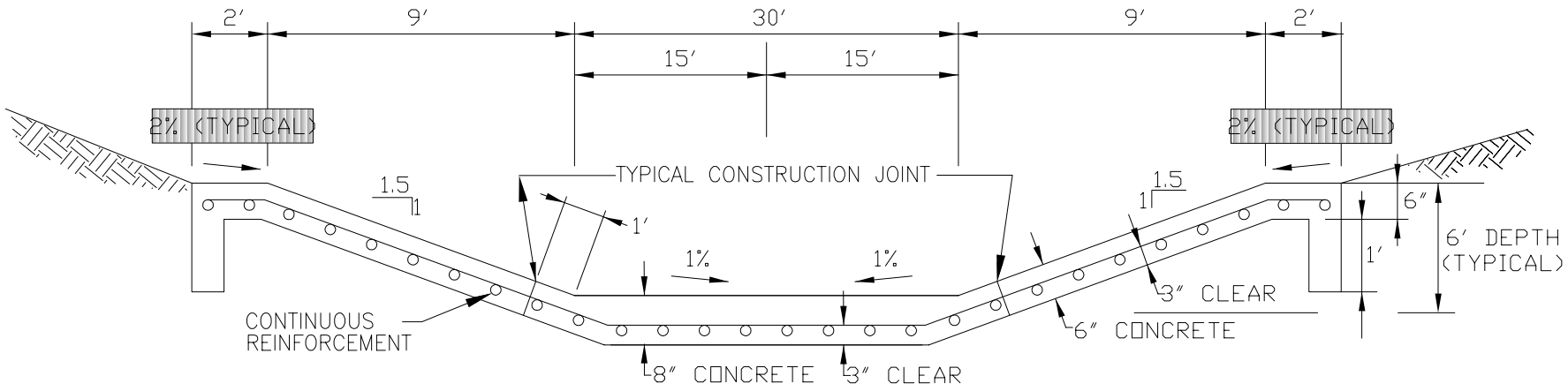

JOB NO. 6-114-003056	CHANNEL 4 TYPICAL CROSS-SECTION	amec
DESIGN:		
DRAWN:		
DATE: 9/2007	LAKE HAVASU CITY AIR INDUSTRIAL PARK	FIGURE 15
SCALE: N.T.S.		

G:\Environmental-Development\2006 Projects\6-114-003056 Lake Havasu City Air Industrial Park\cad\crosssection.dwg

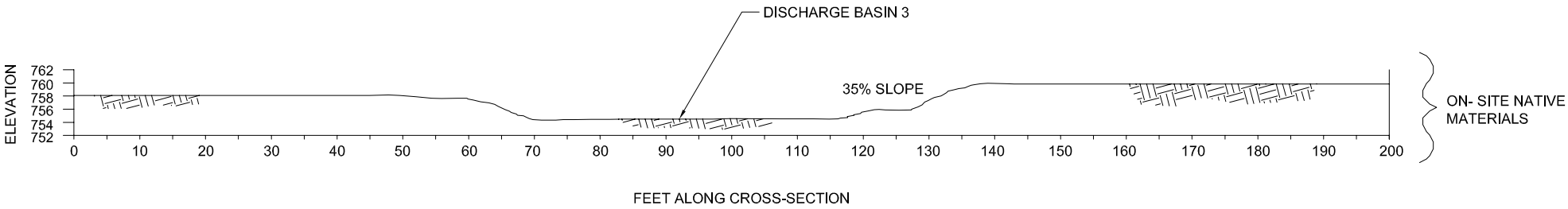

JOB NO. 6-114-003056	DISCHARGE BASIN 3 TYPICAL CROSS-SECTION	
DESIGN:		
DRAWN:		
DATE: 9/2007	LAKE HAVASU CITY AIR INDUSTRIAL PARK	FIGURE 16
SCALE: N.T.S.		

amec